CANTER

FUSO

CANTER 815 CREW CAB

4X2 / WIDE CAB / MANUAL OR DUONIC DCT

OUR SAFEST CANTER EVER WITH AEBS, LDWS AND ESP STANDARD
CLASS LEADING 30,000KM SERVICE INTERVALS.

GVM	GCM	Power/Torque
7,500KG	11,000KG	110KW / 370NM

- Light rigid licence required.
- Can be derated and driven with a passenger car licence.

SPECIFICATIONS

FUSO CANTER

	MODEL	WHEEL BASE	GVM (optional)	GCM (optional)
A	4x2 815 Wide Crew Cab MWB 6 Sp. Duonic AMT(FEB71ER3WFBC)	3400mm	7,500kg (4,495kg)	11,000kg (7,995kg)
B	4x2 815 Wide Crew Cab LWB 6 Sp. Duonic AMT (FEB71GR3WFBC)	3850mm	7,500kg (4,495kg)	11,000kg (7,995kg)
C	4x2 815 Wide Crew Cab LWB 5 Sp. MAN (FEB71GR4WFBC)	3850mm	7,500kg (4,495kg)	11,000kg (7,995kg)

Engine

Engine Version	FUSO 4P10-T4 Diesel
Configuration	4 Cyl. In-line DOHC, 4-Valve
Type	Variable Geometry Turbo Charged Air to Air Intercooled
Displacement	3 litre (2998cc)
Bore	95.8mm
Stroke	104mm
Power (DIN)	110kW @ 2840~3500 rpm
Torque (DIN)	370Nm @ 1350~2840 rpm
Maximum Engine Speed	4100 rpm
Compression Ratio	17.5:1
Cooling System / Oil Cooler	Water cooled,14.8L capacity/ Plate type engine oil cooler
Air Cleaner	Paper Element Type with Restrictor Indicator. Vertical Intake Mounted on Clean Air Side (RH)
Emission Control	Diesel Particulate Filter (DPF) Exhaust Dash Display DPF Status 0~9 (Empty~Full) Parked Regeneration possible from 7~9
Emission Level	ADR 80/03 & EEV rated (Enhanced Environmentally-Friendly Vehicle) Euro 5

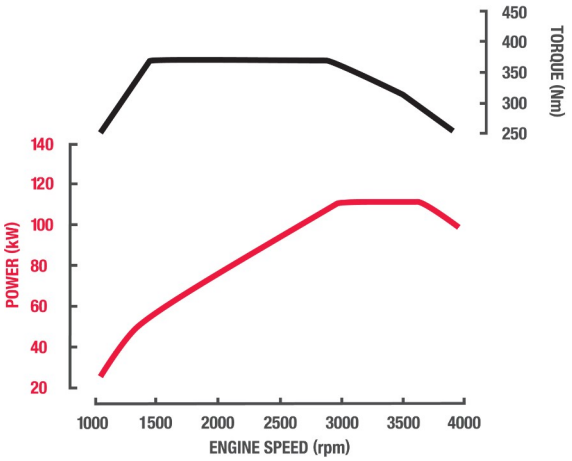

Fuel

Injection System	Bosch Common Rail Direct Injection Bosch Piezo Technology Injectors
Tank Type	Rectangular Steel Tank with Locking Cap
Fuel Capacity *	100 Litres
Filtration	Filter with Water Separator and Indicator Sensor
Notes	*Max Fill to approx 95% of Air Capacity

Cooling

Fan Drive	Thermo modulated continuous control (Viscous)
Radiator	Corrugated Fin with Expansion Tank

Electrical

Voltage	12V Negative Earth
Alternator Capacity	12V-110 amp
Starter Capacity	12V-2.0kW
Battery Capacity	2x12V, 70Ah/5hr
Battery Specification	115D31LX2
Headlamp Type	Halogen
Headlamp Capacity	2x55W/60W

Clutch

Clutch Model	A B Fully Automated Dual Clutch (no clutch pedal)	C FUSO C4W30
Type	A B Dual Clutch (Wet Multi-plate)	C Single Dry Plate, Direct Hydraulic Type

Transmission

Version	A B FUSO Duonic M038S6	C FUSO M038S5
Type/Speeds	A B 6 Speed Dual Clutch with Auto and Manual Modes	C 5 Speed with In-Dash Gearshift Lever
Features	A B Virtually Instant Gear Changes In-Dash Gear Lever with Park Brake Position ECO Mode to Minimise Fuel Usage	C Synchromesh 2nd-5th
Ratios	A B 1st: 5.397 2nd: 3.788 3rd: 2.310 4th: 1.474 5th: 1.000 6th: 0.701 Rev. 5.397	C 1st: 5.494 2nd: 3.193 3rd: 1.689 4th: 1.000 5th: 0.723 Rev. 4.494
PTO Opening	LH Side	

Front Axle

Axle Version	FUSO F350T
Type	Reverse Elliot 'I' Beam
Capacity *	3100kg
Notes	*See MAX LOADING for vehicle capacity.

Front Suspension

Type	Multi-Leaf with Stabiliser Bar and Double Acting Shock Absorbers
Size	1150x70mm Leaves

Rear Axle

Type	Full Floating Banjo Type	
Axle Version	FUSO R035T	
Capacity*	6000kg	
Ratio	A B 5.714:1	C 5.285:1
Notes	*See MAX LOADING for vehicle capacity.	

Rear Suspension

Type	Steel Suspension
Details	Semi-Elliptic Leaf with Stabiliser Bar and Double Acting Shock Absorbers
Size Main Leaves	1250x70mm
Size Helper Leaves	880x70mm

Max Loading

Front	3100kg
Rear	6000kg
Total	7500kg

Options

Options	H31: 4495/7995kg GVM/GCM Rating

SPECIFICATIONS

FUSO CANTER

	MODEL	WHEEL BASE	GVM (optional)	GCM (optional)
A	4x2 815 Wide Crew Cab MWB 6 Sp. Duonic AMT(FEB71ER3WFBC)	3400mm	7,500kg (4,495kg)	11,000kg (7,995kg)
B	4x2 815 Wide Crew Cab LWB 6 Sp. Duonic AMT (FEB71GR3WFBC)	3850mm	7,500kg (4,495kg)	11,000kg (7,995kg)
C	4x2 815 Wide Crew Cab LWB 5 Sp. MAN (FEB71GR4WFBC)	3850mm	7,500kg (4,495kg)	11,000kg (7,995kg)

Steering

Type	Integral Ball and Nut Type
Steering Column	Tilt/Telescopic Adjustable
Power Assist	Standard

Brakes

Type	Hydraulic Dual Circuit with Front and Rear Discs Twin Calliper Front and Rear
Size Front	252x40mm
Size Rear	252x40mm
Features	ABS plus EBD (Electronic Brake Distribution) Active Emergency Braking System (AEBS) Electronic Stability Program (ESP) Exhaust Brake Brake Priority System Electronic Brake Wear Sensors (From Aug 20 build)
Park Brake	Transmission Mounted

Wheels & Tyres

Wheel Type	7 x Single Piece Disc Rims (Including Spare)
Wheel Size	17.5x6.0-127
Wheel Stud Pattern	6 Stud 222.25 PCD
Tyre Size All	215/75R17.5 124/123
Spare Tyre Carrier	Provided

Chassis

Type	Reinforced Tapered Channel
Size	192x60x6mm
Width	752mm
Tensile Strength	440 MPa

Instruments

Gauges	Speedometer with Odometer Tachometer Fuel Level Water Temperature
Colour Information Display	Fuel Consumption DPF Bar Chart from 1~9 Water Temperature Lane Departure Warning Maintenance Reminder System Tripmeters

Multi-Media Package

Satellite Navigation	Maps with heavy vehicle weight, length, height & hazardous material selectable restrictions with 3 years of Map updates
Colour Display	7 inch LCD with touch screen control
Phone Connectivity	Bluetooth® hands free
Audio Visual Entertainment	Bluetooth® music streaming compatible Digital radio DAB+ (also AM/FM for areas not covered by DAB+) USB & 3.5mm/AUX port
Reversing Camera Compatible	Display can accept up to 5 cameras#
Optional Accessories (available at additional cost)	Rear Mounted Parking Sensor Kit (High or Low) USB Quick Charge Kit Qi Wireless Charging Pocket for Mobile Devices Tyre Pressure Monitoring System
Notes	# Cameras available through spare parts

Standard Features

Airbag(s)	Dual Air Bags and Seat Belt Pre-Tensioners (Driver & Far Side Passenger)	
Active Safety Features	ABS plus Electronic Brake force Distribution (EBD) Advanced Emergency Braking (AEBS) Anti-Slip Regulator (ASR) Electronic Stability Program (ESP) Lane Departure Warning System (LDWS)	
Cruise Control	A B Yes	C No
Hill Start System	Yes	
Cab Cooling & Heating	Air Conditioner / Heater / Demister. Rear crew air conditioner and heater with separate control	
Accessory Power	12V Accessory Power Outlet / Cigar Lighter	
Driving	Fuso Multimedia Unit Keyless Central Locking Electric Windows (front only) Cup Holders (2)	
Storage	Dual Overhead Storage Pockets Lockable Storage Under Rear Crew Seats In-Dash Centre Document Storage Door Storage Pockets Dash Storage Tray (1 DIN)	
Cab: External	Front End-Outline Marker Lamps Door Side Impact Beams (front only)	
Chassis	Reverse Warning Buzzer Factory Reverse Camera with Infrared Display and Audible Pickup (Supply only in Cabin with Cab Chassis)	

Cab Features

Type	All Steel Forward Control Fixed Cab
Cab Structure	ECE-R29 European Cab Strength Approved
Mounting	6 Point Isolated Rubber
Additional Engine Access	Removable Engine Access Panel
Colour	Natural White
Windscreen Wipers	2 Speed + Intermittent Cycle with Integrated Washer Nozzles
Rear Vision Mirrors	1 x Internal 2 x External Convex (ECE 46) - Heated
Seating Capacity	7
Seat Belts	4 x Lap Sash Belts and Head Rests for Outside Seating 3 x Lap Belts for Centre Seat Drivers Seat Belt Warning (From Aug 20 build)
Seat (driver)	Suspended with Weight Adjustment, LH Arm Rest and Lumbar Support
Seats (passenger)	Flat Folding, 2 Passenger Bench for Front Passengers
Seats (crew cab rear)	Low Back Bench Seat

Service Intervals

Interval*	30,000km or 12 Months (whichever occurs first)
Notes	* based on normal operating conditions and may be reduced when operating under severe conditions.

Warranty

Basic/Powertrain	5 Years or 200,000kms (whichever occurs first)
Cab Perforation/Anti Corrosion	5 Years

Performance

Turning Circle (kerb to kerb - metres)	A 12.2	B C 13.6
Road Speed (km/h) at Max Engine Speed	A B 127	C 130
Engine Speed (rpm) at 100km/hr (top gear)	A B 2817	C 2687
Gradeability at Rated GVM (theoretical)*	29%	
Notes	*This is theoretical performance only. Actual performance may vary under different conditions	

SPECIFICATIONS

FUSO CANTER

	MODEL	WHEEL BASE	GVM (optional)	GCM (optional)
A	4x2 815 Wide Crew Cab MWB 6 Sp. Duonic AMT(FEB71ER3WFBC)	3400mm	7,500kg (4,495kg)	11,000kg (7,995kg)
B	4x2 815 Wide Crew Cab LWB 6 Sp. Duonic AMT (FEB71GR3WFBC)	3850mm	7,500kg (4,495kg)	11,000kg (7,995kg)
C	4x2 815 Wide Crew Cab LWB 5 Sp. MAN (FEB71GR4WFBC)	3850mm	7,500kg (4,495kg)	11,000kg (7,995kg)

Mass (estimated)*

Front*	A 1785kg	B 1795kg	C 1780kg
Rear*	A 850kg	B C 890kg	
Total*	A 2635kg	B 2685kg	C 2670kg
Notes	* Mass (est.) includes oil and water but excludes spare wheel, tools & fuel. Weights provided are subject to 3.5% variation (+/-)		

Dimensions (mm)

WFF (Width Front Fender) (mm)	1995	
WRA (Width Rear Axle) (mm)	2034	
WRT (Width Rear Track) (mm)	1560	
Width Frame (mm)	752	
A - Length Overall (mm)	A 5935	B C 6685
C - Front Overhang (mm)	1140	
D - Wheelbase (mm)	A 3400	B C 3850
G - Front Axle to Rear of Cab (mm)	1525	
H - Rear of Cab to Rearmost Item Behind Cab (mm)	54	
I - Rearmost Item Behind Cab to Rear Axle (mm)	A 1821	B C 2271
J - Frame, Rear Axle to End (mm)	A 1395	B C 1695
P - Height Cab to Ground (mm)	2220	
Q - Height Cab to Frame (mm)	1514	
R - Height Rear Frame to Ground (mm)	A 795	B C 794

Body Builder's Notes

Notes	Chassis reinforcement must be utilised for Tipper/Demountable type body configurations. To conform with ADR 13/00 and 14/02 (lighting/mirror requirements) the following must be adhered to at body installation. - If overall width exceeds 2.1 metres and other than flat type or tipper body is fitted, rear end-outline markers must be installed. - If overall length exceeds 6.0 metres, side reflectors must be installed. - If overall length exceeds 7.5 metres and width exceeds 2.1 metres, side marker lamps must be installed. - If overall width is less than 1.9 metres (for city cab) or 2.2 metres (for wide cabs), the mirrors must be modified to project not more than 230mm. To conform with ADR 42/04 (General Safety), rear wheel guards must be fitted to the vehicle.

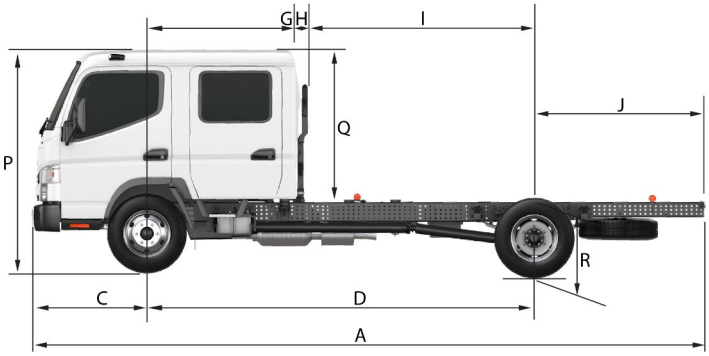

FUSO

Call 1800 033 557

or visit fuso.com.au

Unless specified in writing herein the accessories, applications, bodies or equipment depicted in this document are for illustration purposes only and may not be available from Daimler Truck and Bus Australia Pacific Pty Ltd. (ABN 86 618 413 282) (DTB). No representation or warranty whatsoever is given in relation to any accessories, applications, bodies or equipment or suitability of same that are shown herein that may be manufactured, supplied or fitted by a party other than DTB. DTB reserves the right without notice or obligation to discontinue or make changes to the colour, designs, materials and specifications of the products and options referred to herein at any time. For the most current information and in order to ascertain which accessories, applications, bodies and equipment are available from DTB please contact your authorised FUSO Truck and Bus dealer. Fuso is a registered trademark of Daimler Truck and Bus Australia Pacific Pty Ltd. Copyright DTB. Reproduction in whole or part prohibited without written approval. Part Number TSC165B-SSV1. Valid from 27-Aug-20.